Halcyon AMH80 D
pass through
DISHWASHER

Halcyon **AMH80 D** Features

- **1 year warranty**
- Drain pump as standard
- Three button bright LED display with soft touch controls and alarms menu
- Dosing set up by fascia controls
- Breaktank as standard
- Accurate detergent and rinse aid peristaltic dosing pumps
- Dosing set up by fascia controls
- Easy clean parallel wash and rinse arm assembly
- Optional surface scrap tray filters

Supplied with one pegged (capable of holding 18 10" plates), one open rack (capable of holding 25 pint glasses) and cutlery insert.

Additional racks can be purchased

Gravity drain version available: **AMH80**

Distributor:
KiD Catering Equipment, Oaktree Court Business Centre, Mill Lane, Ness, Cheshire, CH64 8TP
Tel: 0333 123 2450 **sales@kidcateringequipment.com**

Maidaid reserve the right to alter specifications & dimensions without prior notification, all dimensions will be +/- 3mm.

Halcyon AMH80 D
pass through
DISHWASHER

halcyon®

Technical Data

Dimensions (W x D x H)	mm	640 x 745 x 1335 + Feet
Feet height	mm	165-225
Rack size	mm	500 x 500
Maximum useable height	mm	435
Door opening	mm	460
Theoretical productivity	Racks/h	40
Effective productivity	Racks/h	30*

***Allowing 30 seconds for reloading**
Cycle times may vary depending on local conditions/services

Installation Diagram –
All services must be within 1 meter

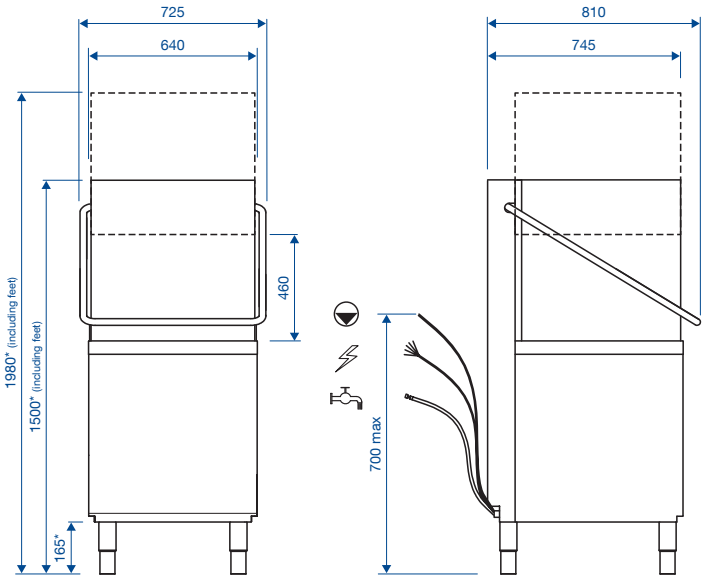

*Height-adjustable feet + 60mm

Pumped waste into upstand, maximum height 700mm

Power

Water supply 2 – 4 bar

Wash tank element	kW	2.1
Boiler element	kW	6.0
Wash pump	kW	0.47
Tank capacity	L	15
Noise emission	dB	≤ 65

Packaging Specs

Gross weight	Kg	96
Cubic volume	m³	0.98
Dim. (W x D x H)	mm	760 x 840 x 1520

Power Supply

Installed power	AMP	kW
230V – 50Hz – 1N	20	4.5
	30*	6.5
Optional 3 Phase config	Total load 6.5kW	
Fused	16 amp	

***Standard configuration**

Water Connection

Inlet water pressure	Bar	2 to 4
Flow rate L/Min	L/Min	6
Water inlet temp	°C	10 to 50
Water connection	BSP	¾"
Waste connection	Ø	Int 19/ext 24

Cycle Information

Number of standard cycles		2
Standard cycles times	Sec	90/180
Special cycle		Long
Self-cleaning cycle		Partial clean
Water consumption per cycle	L	2.5
Wash temperature	°C	60 – adjustable
Rinse temperature	°C	82 – adjustable

Distributor:
KiD Catering Equipment, Oaktree Court Business Centre, Mill Lane, Ness, Cheshire, CH64 8TP
Tel: 0333 123 2450 **sales@kidcateringequipment.com**

Maidaid reserve the right to alter specifications & dimensions without prior notification, all dimensions will be +/- 3mm.